domix M6

PINOUT

Domotic Module for smart home & co

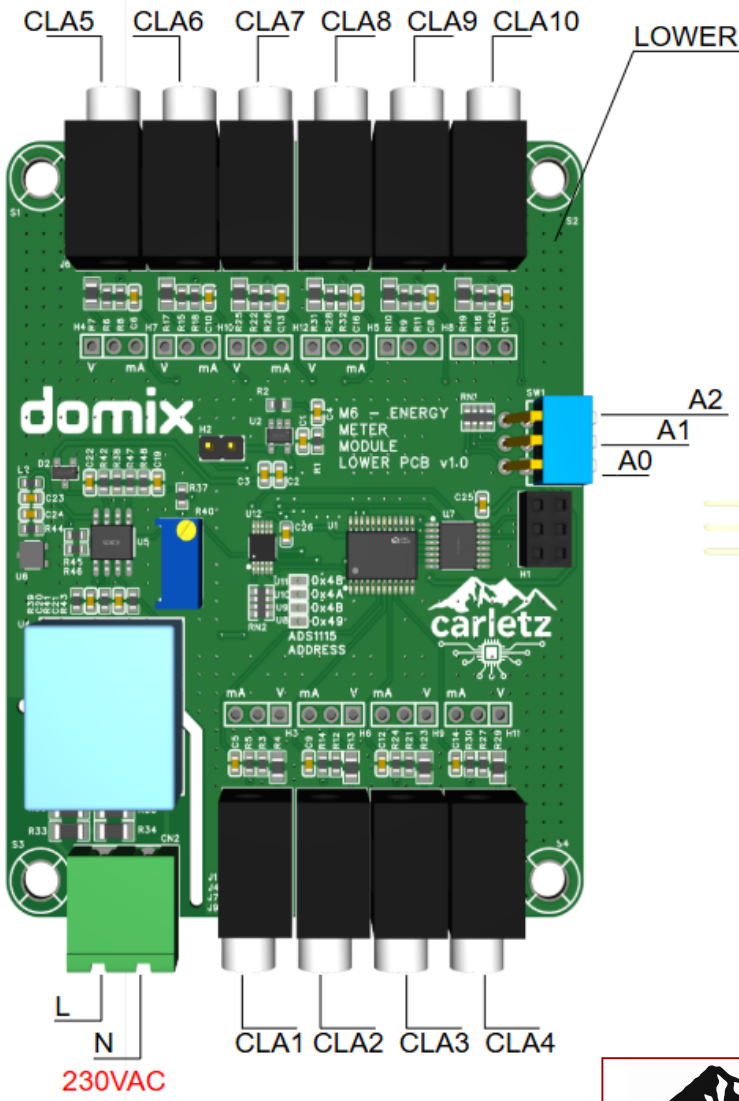

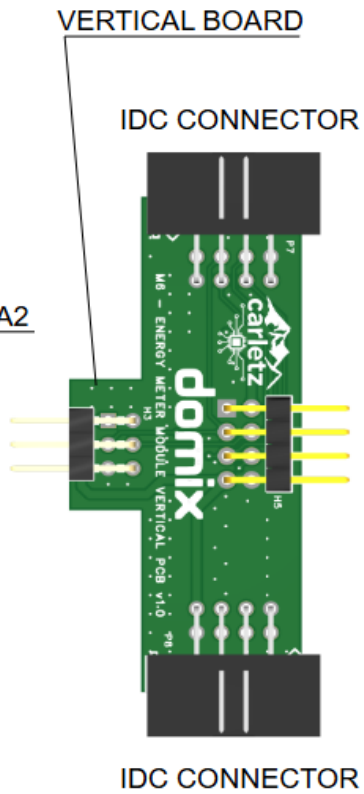

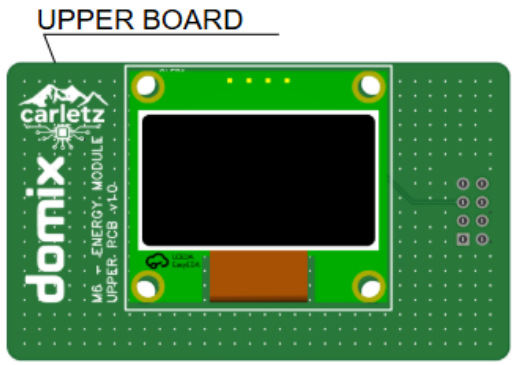

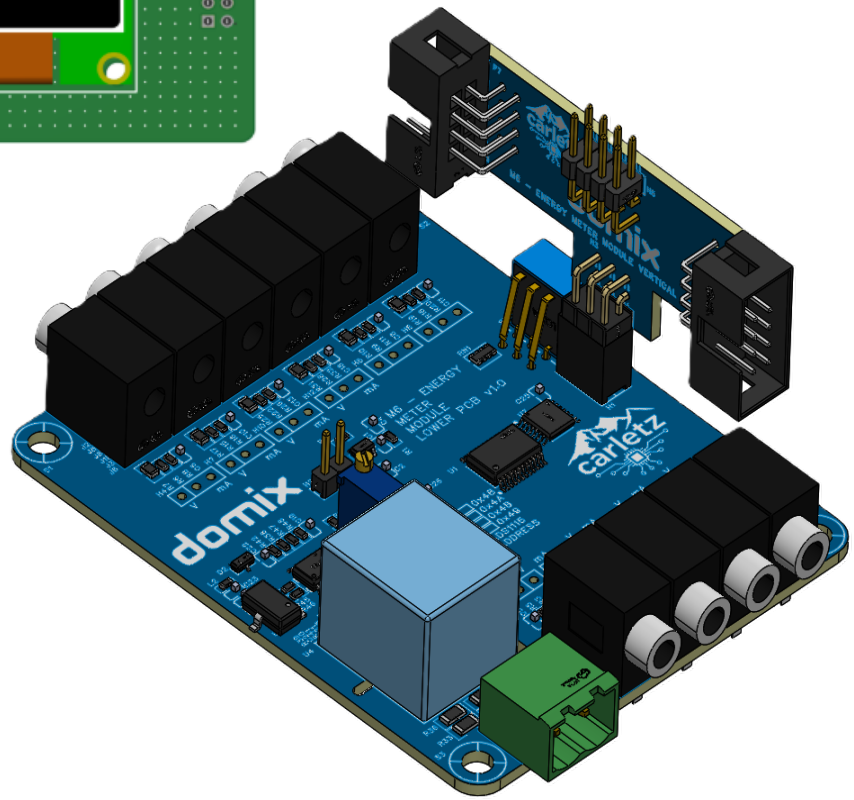

DOMIX - Domotic module for smart home & co			Create at	2026-01-29	Drawn: carletz
			Update at	2026-02-08	Reviewed: carletz
Version	Size	Page 1 Total 3	Schematic	M6 - Energy Meter Module	
1	A4	EasyEDA	Board	M6 - ENERGY	Page / Description

Main Voltage reading

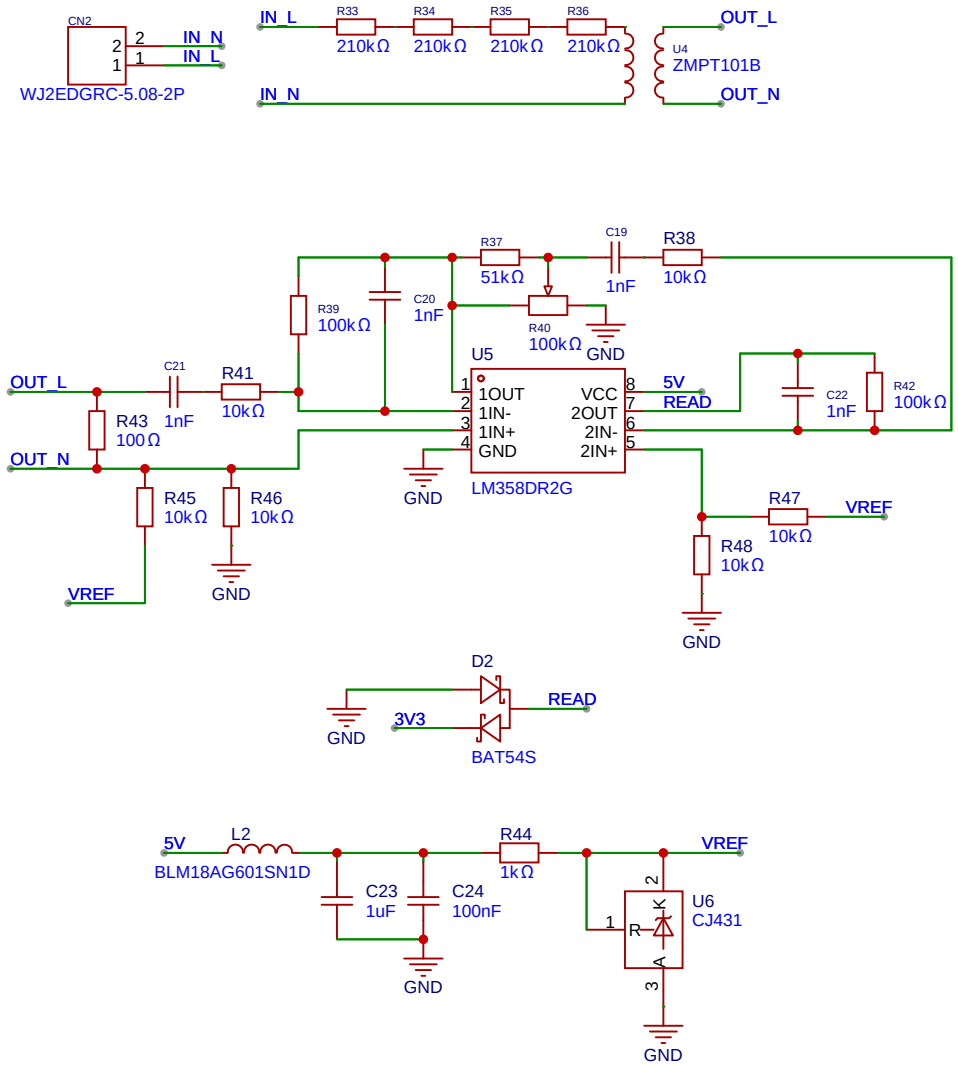

NOTE: Please add C71370 2 pin 5.08 connector to your BOM

I2C

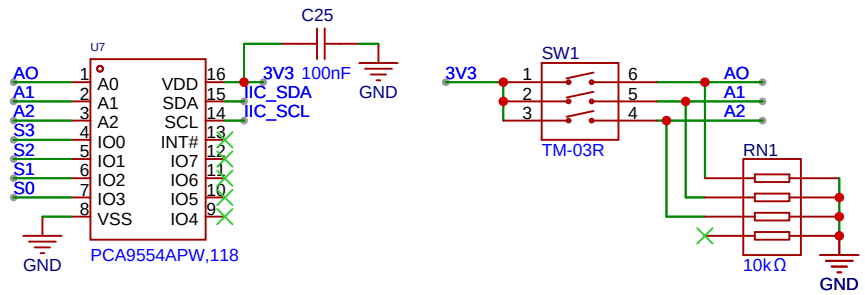

Connector & Miscellanea

DOMIX - Domotic module for smart home & co			Create at	2026-01-29	Drawn	carletz
			Update at	2026-02-09	Reviewed	carletz
Version	Size	Page 2 Total 3	Schematic	M6 - Energy Meter Module		
1	A4	EasyEDA	Board	M6 - ENERGY	Page	Voltage Reading & I2C

Clamp Meter

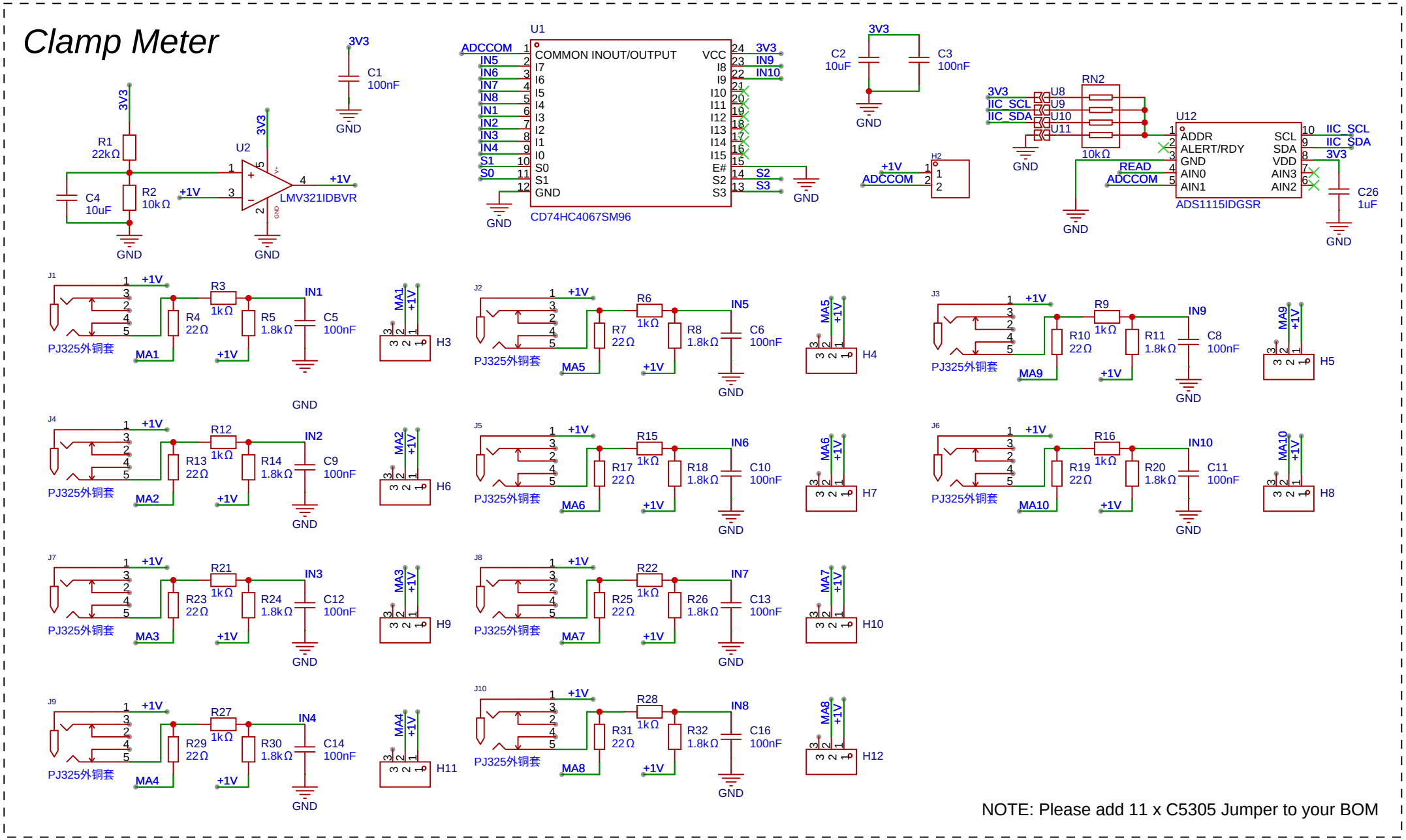

NOTE: Please add 11 x C5305 Jumper to your BOM

carletz	DOMIX - Domotic module for smart home & co		Create at	2026-01-29	Drawn carletz
			Update at	2026-02-09	Reviewed carletz
			Schematic	M6 - Energy Meter Module	
	Version 1	Size A4	Page 3 Total 3	EasyEDA	
			Board	M6 - ENERGY	Page Clamp Meter